LONG SEAMS

COURSE	ORIENTATION	ORIENTATION
1(TOP)	120°	300°
2	125°	305°
3	120°	300°
4	125°	305°
5	120°	300°
6	125°	305°

*VERT – TOP TO BOTTOM

Ship loose items:
NONE

*NOTE: ALL ELEVATIONS ARE PULLED FROM WELD SEAM FOR EASE OF FABRICATION

NOTE 7: SPOT X-RAY FOR NOZ. F AND CIRC. SEAM PER CODE.

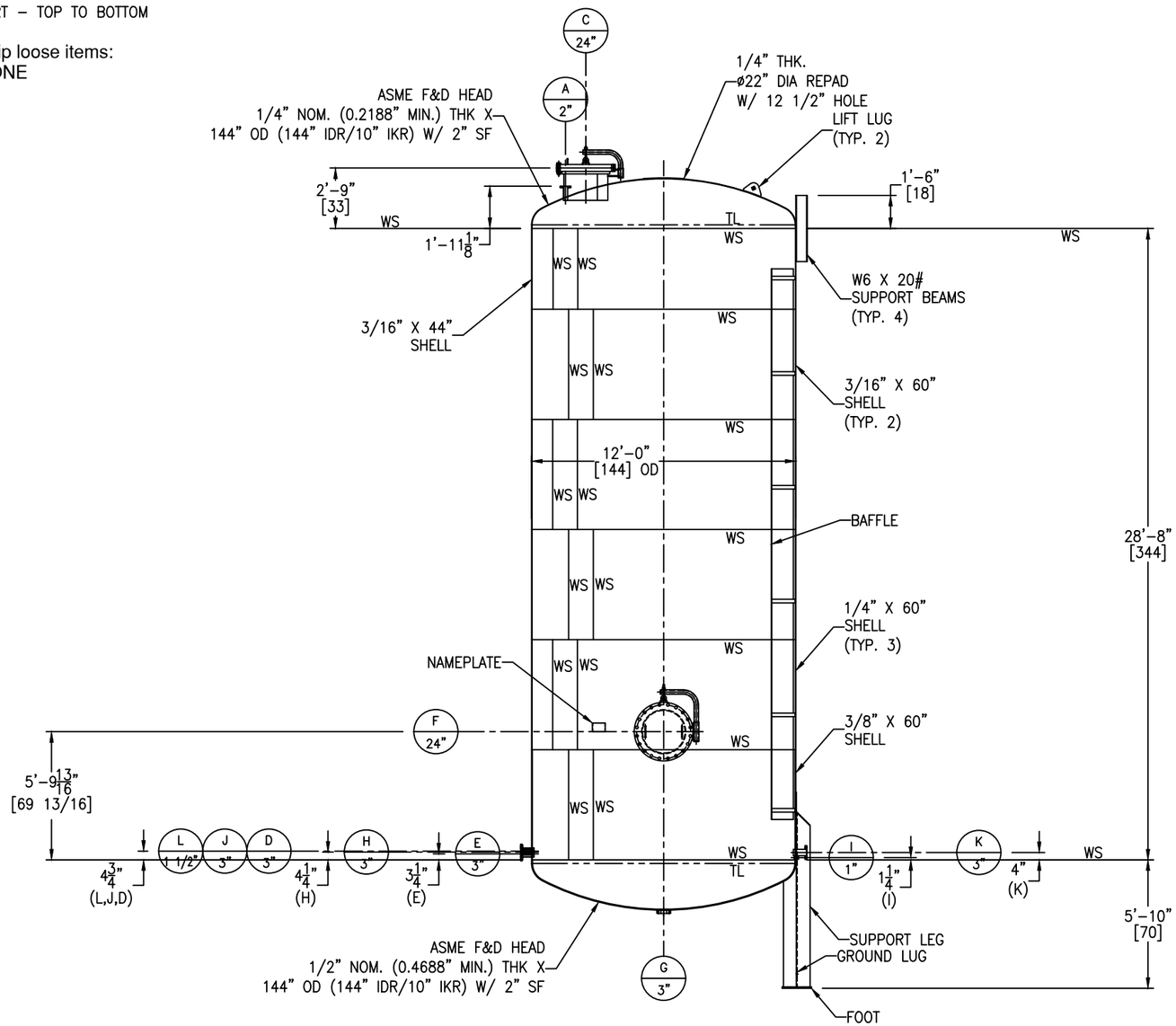

FC-14 GT-11

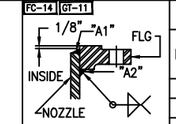

FIGURE NO. 1

FC-14 GT-11

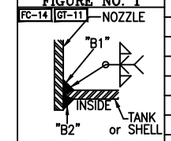

FIGURE NO. 7

FC-14 SA-30

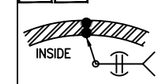

SHELL THK. < 5/16"

FIGURE NO. 9

FC-14 SA-30

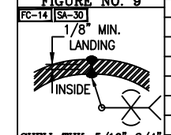

SHELL THK. 5/16"-3/4"
FIGURE NO. 10

FC-14 SA-30

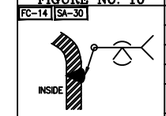

FOR HEADS
FIGURE NO. 11

FC-14 GT-11

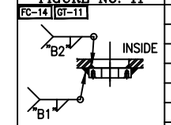

STUDPAD TO HEAD
FIGURE NO. 12

NOZZLE SCHEDULE

MARK	SERVICE	SIZE	RATING	TYPE / STYLE	NECK SCHED.	PROJECTION EXT. (E)	PROJECTION INT. (MIN.)	WELD FIGURE	REPAD SIZE (WIDTH X THK.)	WELD SIZE "A1"	"A2"	"B1"	"B2"	"C1"	"C2"
A	–	2"	150#	RFSO	40S	SEE DWG	1"	1,7	–	1/4	3/16	3/16	1/8	–	–
C	MANWAY	24"	150#	RFSO W/ DAVIT	1/4"	SEE DWG	1"	1,7	–	1/4	3/16	3/16	1/8	–	–
D	–	3"	150#	RFSO	40S	6"	1"	1,7	–	5/16	1/4	1/4	1/8	–	–
E	–	3"	150#	RFSO	40S	6"	1"	1,7	–	5/16	1/4	1/4	1/8	–	–
F	MANWAY	24"	150#	RFSO W/ DAVIT	1/4"	6"	1"	1,7	–	1/4	3/16	5/16	1/8	–	–
G	OUTLET	3"	150#	STUDPAD	–	6"	–	12	–	–	–	1/2	3/8	–	–
H	–	3"	150#	RFSO	40S	6"	1"	1,7	–	5/16	1/4	1/4	1/8	–	–
I	–	1"	3000#	FULL THRD CPLG	–	–	1/2"	7	–	–	–	3/16	1/8	–	–
J	–	3"	150#	RFSO	40S	6"	1"	1,7	–	5/16	1/4	1/4	1/8	–	–
K	–	3"	150#	RFSO	40S	6"	1"	1,7	–	5/16	1/4	1/4	1/8	–	–
L	–	1 1/2"	150#	RFSO	40S	6"	1"	1,7	–	5/16	1/4	3/16	1/8	–	–

MATERIALS OF CONSTRUCTION

	VESSEL
SHELL	SA240-316/316L
HEADS	SA240-316/316L
RIM ANGLE	–
NOZZLE NECKS	SA312-316/316L WLD
NOZZLE FLANGES	SA182F-316/316L
MANWAY NECKS	SA240-316/316L
MANWAY FLANGES	SA182F-316/316L
GASKETS	GARLOCK 3000
BOLTS/STUDS	SA193-B7 (ZINC PLATED)
NUTS	SA194-2H (ZINC PLATED)
REPADS	SA240-316/316L
COUPLINGS	SA182F-316/316L
SUPPORTS/HOLD DOWNS	SA240-316/316L
LIFTING LUGS	SA240-316/316L
VACUUM RINGS	–
INSULATION RINGS	–
GROUND LUG	SA240-316/316L
BAFFLE / BAFFLE SUPPORT	SA240-316/316L
SUPPORT BEAM	SA240-316/316L
TANK CLIPS (LADDER)	–
HANDRAIL	–
HANDRAIL CLIPS	–
PLATFORM	–
PLATFORM CLIPS	–
DIPTUBE SUPPORT	–
JACKET SHELL	–
JACKET HEADS	–
JACKET NOZZLE NECKS	–
JACKET NOZZLE FLANGES	–

DESIGN DATA

	VESSEL
DESIGN AND FAB. CODE	ASME
CERT. STAMP REQ'D.	NO
DESIGN PRESSURE	ATM
DESIGN TEMPERATURE	215° F
MIN. DESIGN METAL TEMP.	-20° F @ ATM
OPERATING PRESSURE	–
OPERATING TEMPERATURE	–
JOINT EFFICIENCY HEADS	0.70
JOINT EFFICIENCY SHELL	0.70
CORROSION ALLOWANCE	1/8" (SHELL & HEADS ONLY)
SPECIFIC GRAVITY	1.6
EARTHQUAKE ZONE	Ss = (0.071) S1 = (0.031)
WIND LOAD	140 MPH
STRESS RELIEF	NOT REQ'D
RADIOGRAPHIC EXAM	SPOT (SEE NOTE 7)
DYE PENETRANT EXAM	NOT REQ'D
MAGNETIC PARTICLE EXAM	NOT REQ'D
HYDROSTATIC TEST	–
PNEUMATIC TEST	2 PSIG / GAUGE #1
JKT DESIGN AND FAB. CODE	–
JKT CERT. STAMP REQ'D.	–
JKT DESIGN PRESSURE	–
JKT DESIGN TEMPERATURE	–
JKT MIN. DESIGN METAL TEMP.	–
JKT OPERATING PRESSURE	–
JKT OPERATING TEMPERATURE	–
JKT JOINT EFFICIENCY HEADS	–
JKT JOINT EFFICIENCY SHELL	–
JKT HYDRO TEST	–

VESSEL FINISH

INTERIOR WELD TREATMENT:	SAV TANK STANDARD
EXTERIOR WELD TREATMENT:	SAV TANK STANDARD
SAV TANK FINISHING STANDARD:	SEE NOTE 6
INSULATION:	N/A
PAINTING:	N/A

VESSEL CAPACITY AND WEIGHTS

OPERATING CAPACITY	–
FULL CAPACITY	26,100 GAL.
EMPTY SHIPPING WEIGHT	23,900 LBS.
WEIGHT FULL OF WATER	247,500 LBS.
WEIGHT FULL OF PRODUCT	381,600 LBS.

ASME SECT. VIII, DIV. 1
2023 EDITION

ENG. _____ DATE: _____

Q.C. _____ DATE: _____

A.I. _____ DATE: _____

This drawing is issued for customer approval. please review, make approval changes (if any) in red. check the appropriate box, sign & date.

- ☐ Approval – no changes. Please proceed with fabrication.
- ☐ Approved as noted. Please proceed with fabrication
- ☐ Not approved. Please make changes and resubmit.

Customer signature _____ Date _____

GENERAL NOTES

1.) COVER ALL FLANGES, OPENINGS & MACHINED SURFACES PRIOR TO SHIPMENT UNLESS OTHERWISE NOTED.
2.) BOLT HOLES TO STRADDLE 0° & 180° UNLESS OTHERWISE NOTED.
3.) REPADS TO HAVE (1) ø1/4" NPT TELL-TALE HOLES FOR PNEUMATIC TESTING AT 2 PSIG FOR PRESSURE RETAINING PARTS. ALL OTHER REPADS TO HAVE (1) ø1/4" WEEP HOLE AT LOWEST POINT ON PAD.
4.) ASME CODE VESSELS TO BE IN ACCORDANCE WITH UG-80 & UG-81. TOLERANCES: +/- 1/8" FOR DIMENSIONS AND +/- 2 DEGREES FOR ORIENTATIONS.
5.) ASME MATERIALS TO CONFORM TO THE FOLLOWING: FLANGES – B16.5, FITTINGS – B16.9 & COUPLINGS – B16.11.
6.) PICKLE ALL EXTERIOR WELDS. PASSIVATE INTERIOR & EXTERIOR OF VESSEL.
7.) SPOT X-RAY FOR NOZ. F AND CIRC. SEAM PER CODE.

REV	D.BY	C.BY	DATE	DESCRIPTION
2				AS BUILT
1	RS	NP	7/22/25	CERTIFIED
0	RS	AD	7/3/25	APPROVAL

⚠1 REVISIONS

Savannah Tank & Equipment Corp.
1517 Telfair Road, Savannah, GA 31415
(912) 233-8902

DRAWN BY: RS
CHK'D BY: AD
APPROVED BY: NP
SCALE: 1/4" = 1'-0"

KEMIRA WATER SOLUTIONS INC.
FERRIC SULFATE STORAGE TANK
EQUIP. # T306
CUST. PO # 4503357419

DRAWING NO.: 074-25-1 SHT 1 OF 6 REV. SET 1

LONG SEAMS

COURSE	ORIENTATION	ORIENTATION
1(TOP)	120°	300°
2	125°	305°
3	120°	300°
4	125°	305°
5	120°	300°
6	125°	305°

*VERT – TOP TO BOTTOM

Ship loose items:
NONE

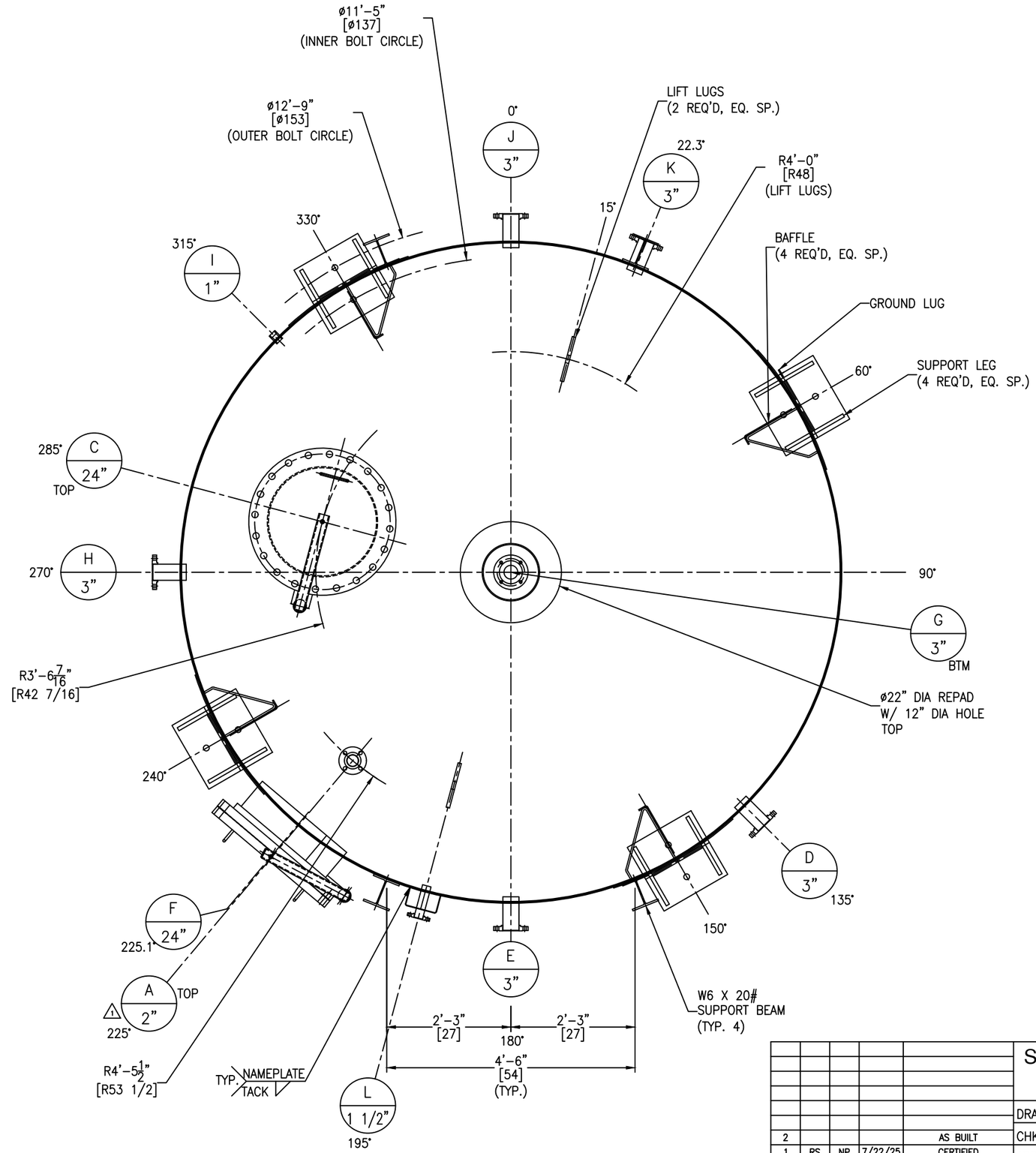

REV	D.BY	C.BY	DATE	DESCRIPTION
2				AS BUILT
1	RS	NP	7/22/25	CERTIFIED
0	RS	AD	7/3/25	APPROVAL

REVISIONS

Savannah Tank & Equipment Corp.
1517 Telfair Road, Savannah, GA 31415
(912) 233-8902

DRAWN BY: RS
CHK'D BY: AD
APPROVED BY: NP
SCALE: 1/4" = 1'-0"

KEMIRA WATER SOLUTIONS INC.
FERRIC SULFATE STORAGE TANK
EQUIP. # T306
CUST. PO # 4503357419

DRAWING NO.: 074-25-2 SHT 2 OF 6 REV. SET 1

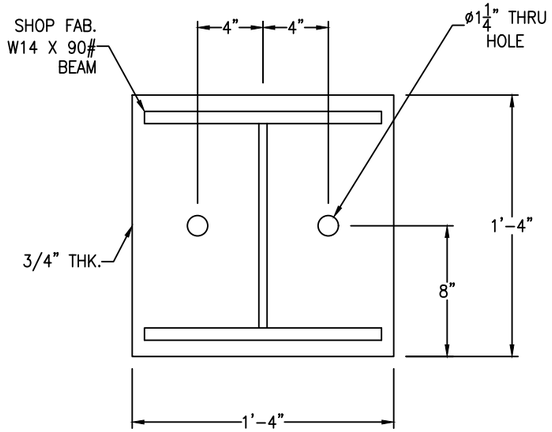

FOOT DETAIL

(4 REQ'D) SCALE: 2" = 1'-0"

FC-14

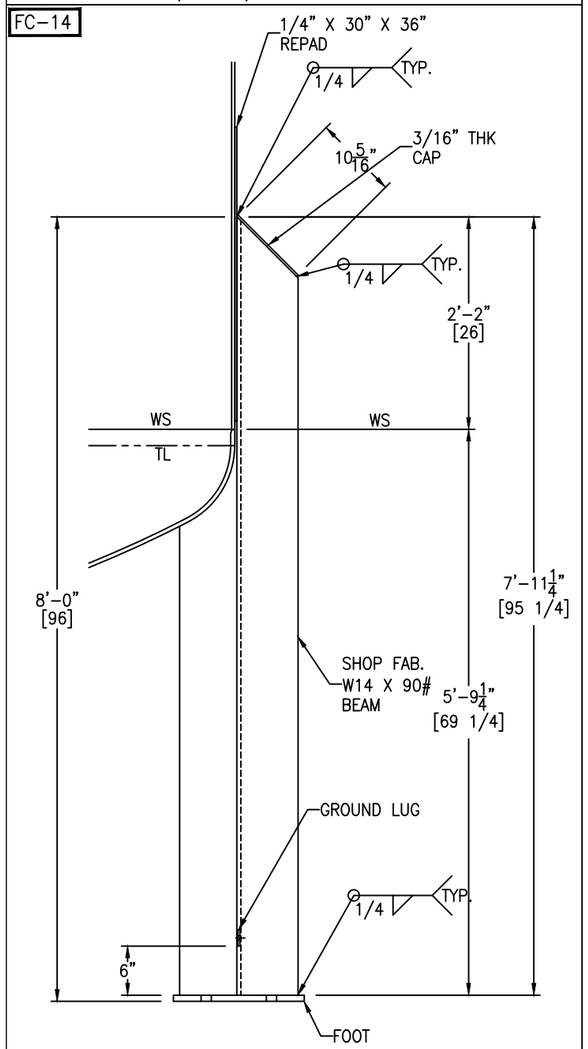

LEG DETAIL

(4 REQ'D) SCALE: 1" = 1'-0"

FC-14

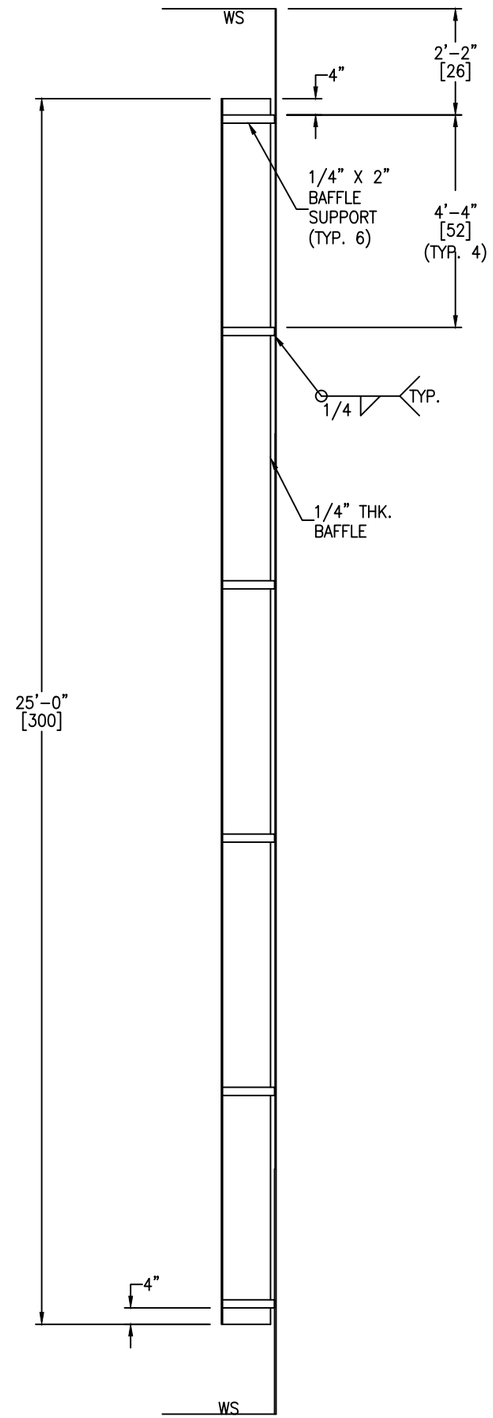

BAFFLE DETAIL

(4 REQ'D) SCALE: 1/2" = 1'-0"

FC-14

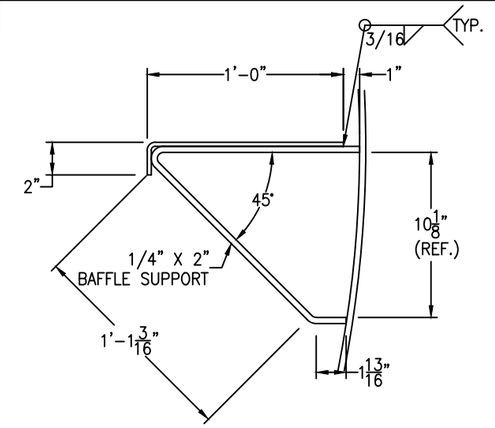

BAFFLE SUPPORT DETAIL

(24 REQ'D) SCALE: 2" = 1'-0"

FC-14

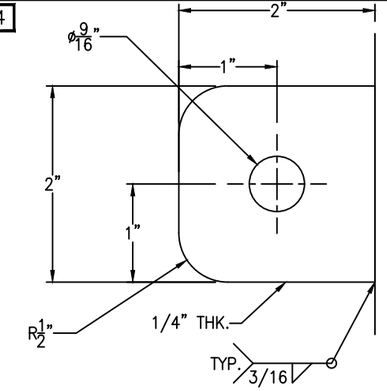

GROUND LUG IS LOCATED @ 60°

GROUND LUG DETAIL

(1 REQ'D) SCALE: 1'-0" = 1'-0"

FC-14

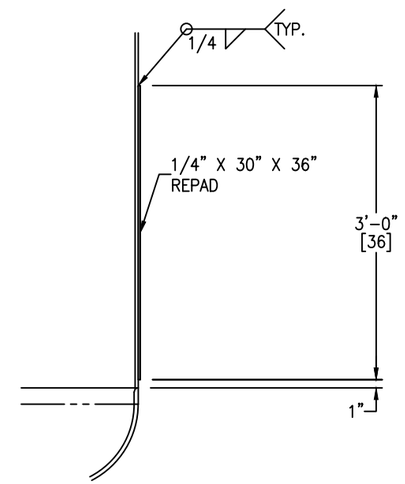

LEG REPAD DETAIL

(4 REQ'D) SCALE: 1" = 1'-0"

FC-14

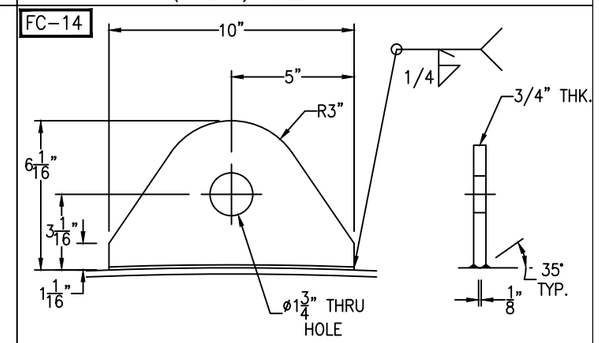

TANK WT. <= 30000#

SHACKLE PIN DIA. = 1 5/8"

LIFT LUG DETAIL

(2 REQ'D) SCALE: 3" = 1'-0"

FC-14

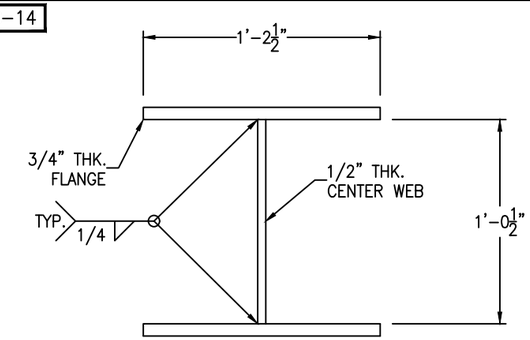

BEAM LEG DETAIL

(4 REQ'D) SCALE: 2" = 1'-0"

REV	D.BY	C.BY	DATE	DESCRIPTION
2				AS BUILT
1	RS	NP	7/22/25	CERTIFIED
0	RS	AD	7/3/25	APPROVAL

⚠ REVISIONS

Savannah Tank & Equipment Corp.
1517 Telfair Road, Savannah, GA 31415
(912) 233-8902

DRAWN BY: RS
CHK'D BY: AD
APPROVED BY: NP
SCALE: 1/4" = 1'-0"

KEMIRA WATER SOLUTIONS INC.
FERRIC SULFATE STORAGE TANK
EQUIP. # T306
CUST. PO # 4503357419

DRAWING NO.: 074-25-3 SHT 3 OF 6 REV. SET 1

FC-14

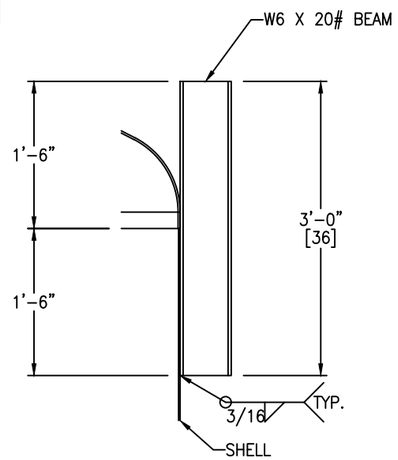

SUPPORT BEAM DETAIL

(4 REQ'D) SCALE: 1" = 1'-0"

FC-14

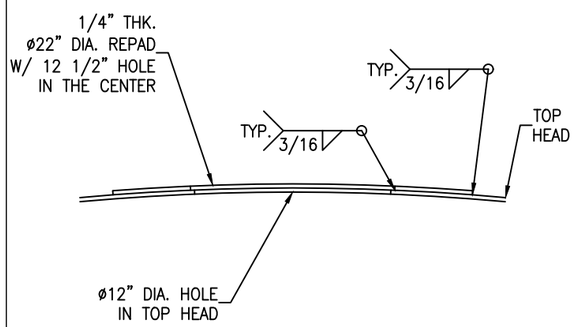

TOP HEAD REPAD DETAIL

(1 REQ'D) SCALE: 2" = 1'-0"

REV	D.BY	C.BY	DATE	DESCRIPTION
2				AS BUILT
1	RS	NP	7/22/25	CERTIFIED
0	RS	AD	7/3/25	APPROVAL

⚠1 REVISIONS

Savannah Tank & Equipment Corp.
1517 Telfair Road, Savannah, GA 31415
(912) 233-8902

DRAWN BY: RS
CHK'D BY: AD
APPROVED BY: NP
SCALE: 1/4" = 1'-0"

KEMIRA WATER SOLUTIONS INC.
FERRIC SULFATE STORAGE TANK
EQUIP. # T306
CUST. PO # 4503357419

DRAWING NO.: 074-25-4 SHT 4 OF 6 REV. SET 1

FC-14

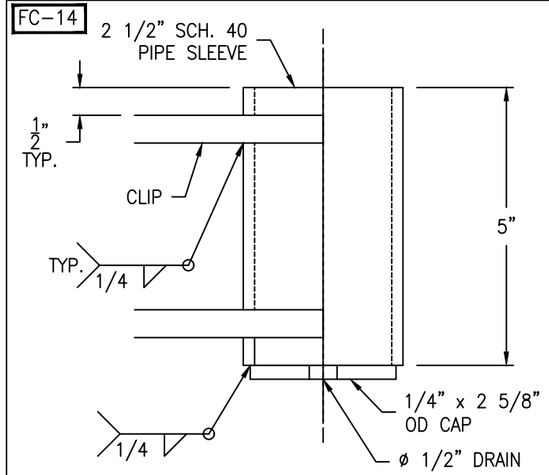

SLEEVE DETAIL

(1 REQ'D) SCALE: 6" = 1'-0"

FC-14

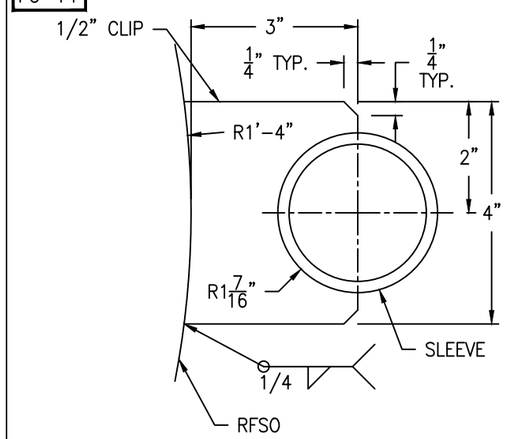

UPPER CLIP DETAIL

(1 REQ'D) SCALE: 6" = 1'-0"

FC-14

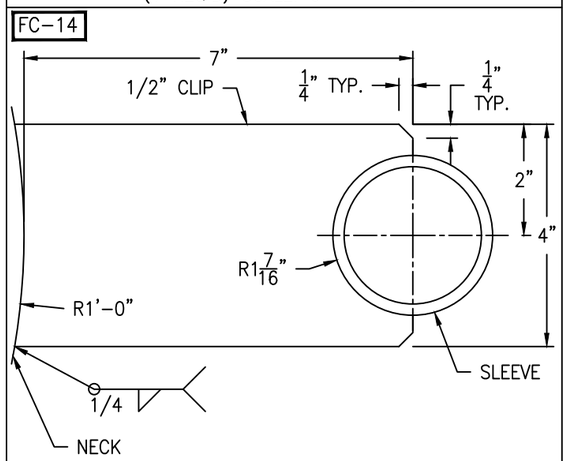

LOWER CLIP DETAIL

(1 REQ'D) SCALE: 6" = 1'-0"

FC-14

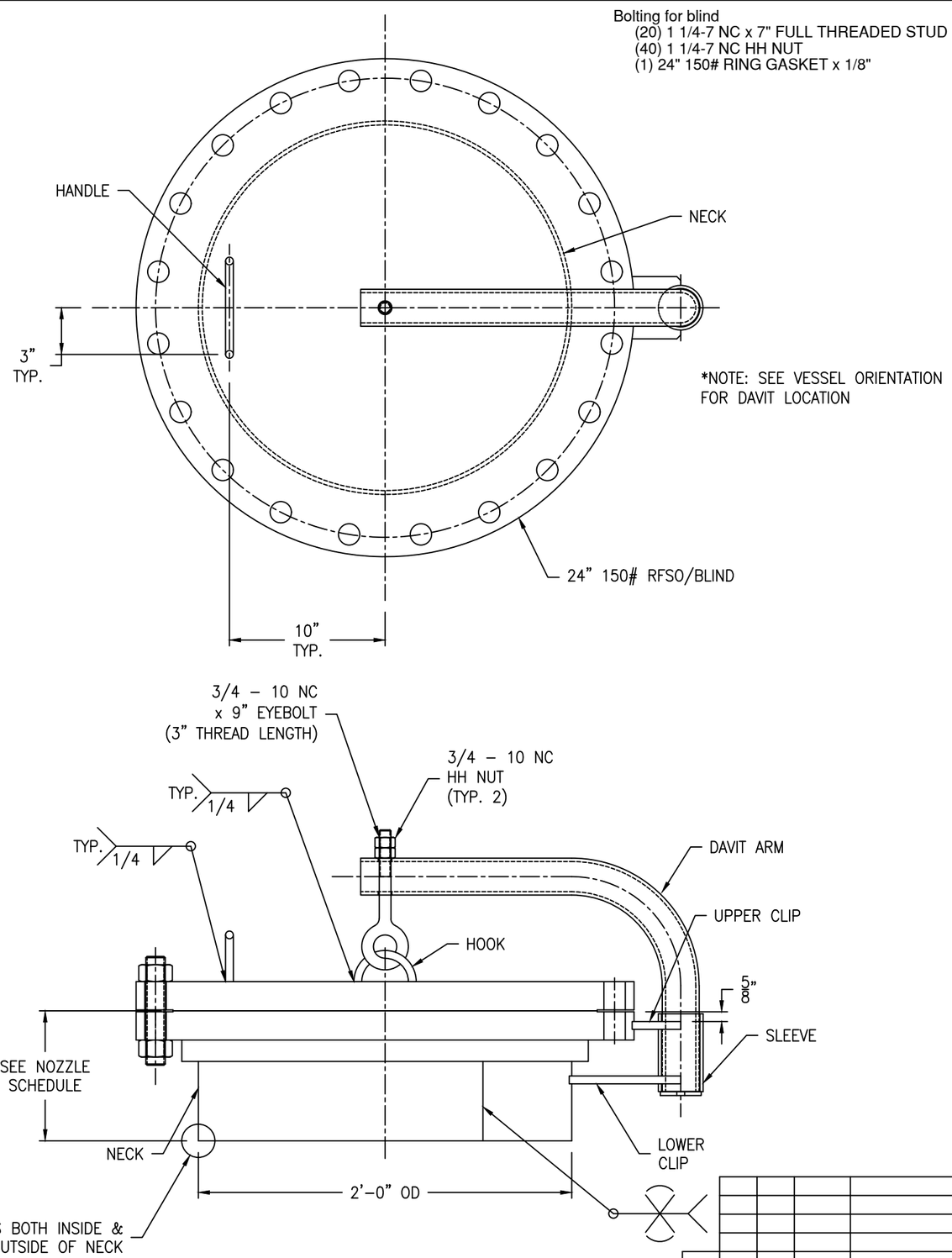

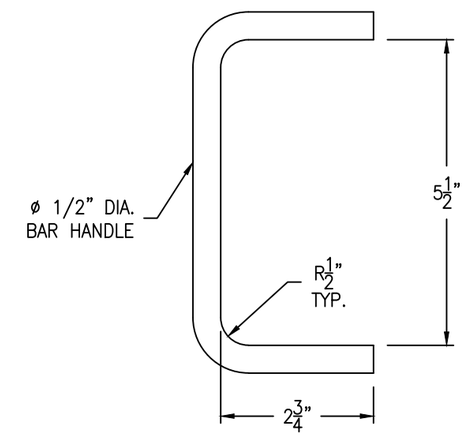

HANDLE DETAIL

(1 REQ'D) SCALE: 6" = 1'-0"

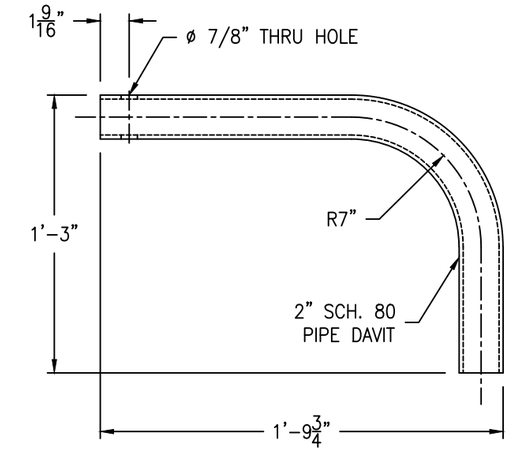

DAVIT ARM DETAIL

(1 REQ'D) SCALE: 2" = 1'-0"

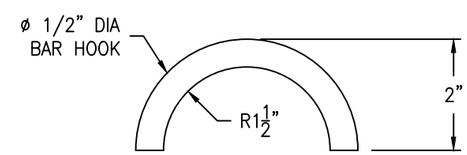

HOOK DETAIL

(1 REQ'D) SCALE: 6" = 1'-0"

REV	D.BY	C.BY	DATE	DESCRIPTION
2				AS BUILT
1	RS	NP	7/22/25	CERTIFIED
0	RS	AD	7/3/25	APPROVAL

⚠ REVISIONS

Savannah Tank & Equipment Corp.
1517 Telfair Road, Savannah, GA 31415
(912) 233-8902

DRAWN BY: RS
CHK'D BY: AD
APPROVED BY: NP
SCALE: 2" = 1'-0"

KEMIRA WATER SOLUTIONS INC.
FERRIC SULFATE STORAGE TANK
EQUIP. # T306
CUST. PO # 4503357419

DRAWING NO.: 074-25-5 SHT 5 OF 6 REV. SET 1

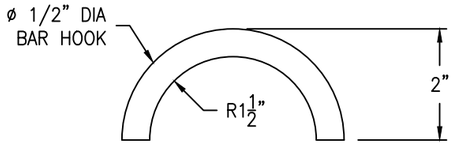

HOOK DETAIL

(1 REQ'D) SCALE: 6" = 1'-0"

FC-14

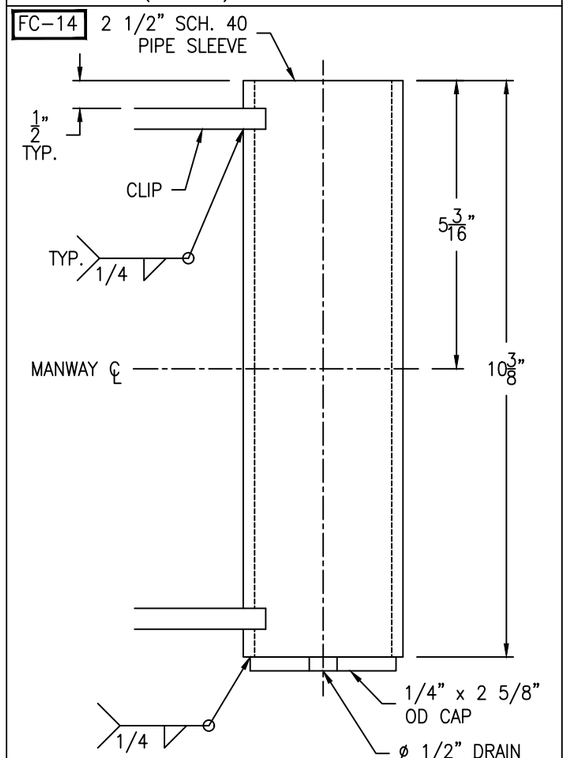

SLEEVE DETAIL

(1 REQ'D) SCALE: 6" = 1'-0"

FC-14

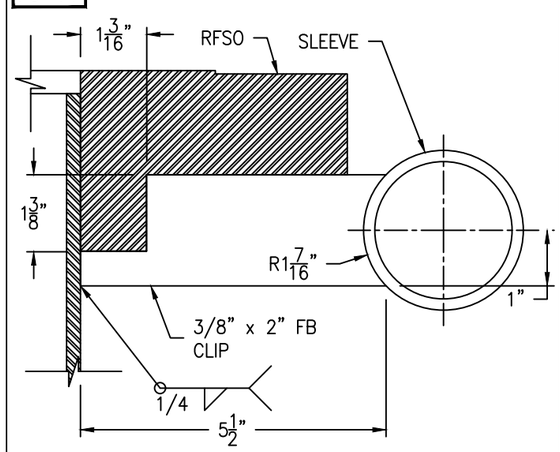

CLIP DETAIL

(2 REQ'D) SCALE: 6" = 1'-0"

FC-14

Bolting for blind
(20) 1 1/4-7 NC x 7" FULL THREADED STUD
(40) 1 1/4-7 NC HH NUT
(1) 24" 150# RING GASKET x 1/8"

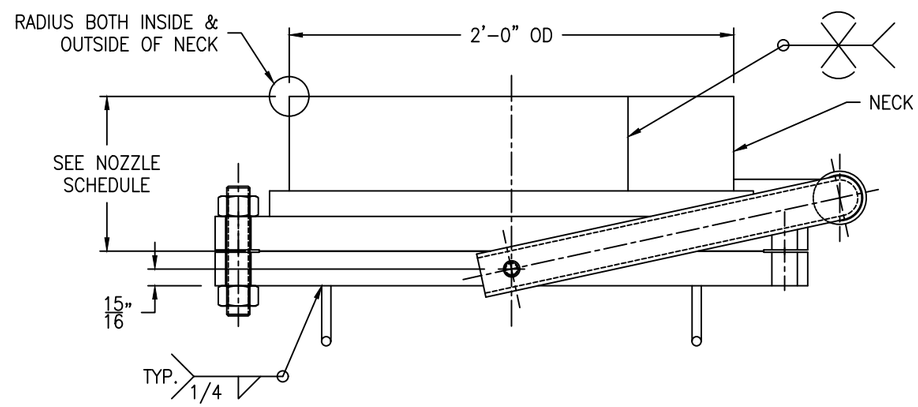

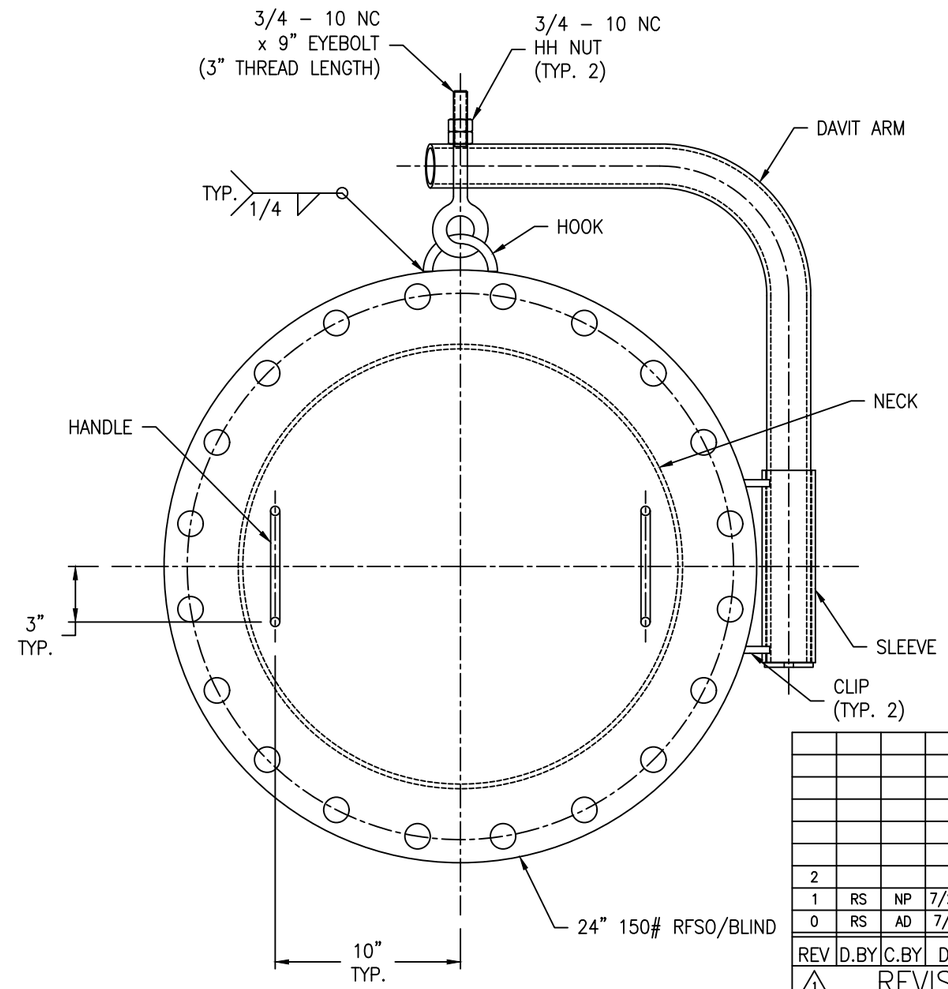

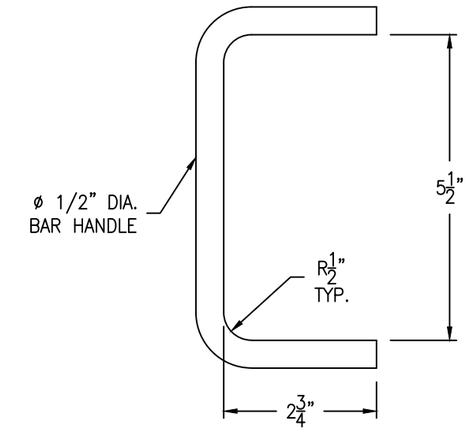

HANDLE DETAIL

(2 REQ'D) SCALE: 6" = 1'-0"

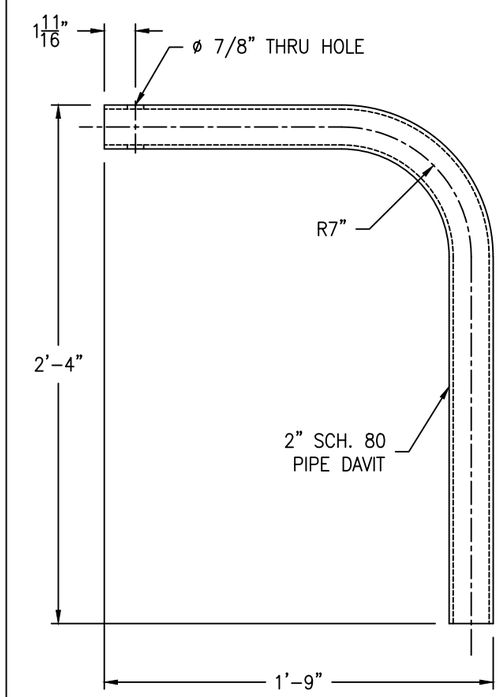

DAVIT ARM DETAIL

(1 REQ'D) SCALE: 2" = 1'-0"

REV	D.BY	C.BY	DATE	DESCRIPTION
2				AS BUILT
1	RS	NP	7/22/25	CERTIFIED
0	RS	AD	7/3/25	APPROVAL

REVISIONS

Savannah Tank & Equipment Corp.
1517 Telfair Road, Savannah, GA 31415
(912) 233-8902

DRAWN BY: RS
CHK'D BY: AD
APPROVED BY: NP
SCALE: 2" = 1'-0"

KEMIRA WATER SOLUTIONS INC.
FERRIC SULFATE STORAGE TANK
EQUIP. # T306
CUST. PO # 4503357419

DRAWING NO.: 074-25-6 SHT 6 OF 6 REV. SET 1